JUNE 1991 ISSUE # 35

VZ 200/300

HUNTER VALLEY VZ JOURNAL

* FIFTH BIRTHDAY *
TRACK FORMATTER
HISTORY USER GROUPS
LASER LIGHT PEN
EPROM PROGRAMMER
LOTTO SELECTOR
HAVZ USER GROUP

PRODUCED BI-MONTHLY BY H.V.VZ.U.G.
A NON PROFIT ORGANIZATION

HELP - SELL & TELL PAGE 3

SINGLE TRACK FORMATTER PAGES 4-5
BY DAVE MITCHELL
AFTER A LONG ABSENCE ANOTHER USEFUL UTILITY FROM DAVE. THIS ONE WILL FORMATT A SINGLE TRACK INSTEAD OF THE WHOLE DISK. VERY USEFUL WITH TRACK ZERO.

HISTORY OF AUST. AND NZ VZ USER GROUPS PART II PAGES 6-7
BY BOB KITCH
BOB PRESENTS THE CONCLUDING ARTICLE ON THE HISTORY OF VZ USER GROUPS IN BOTH AUSTRALIA AND NEW ZEALAND. INTERSTING READING.

TONE GENERATOR PROGRAM PAGES 8-10
BY BOB KITCH
AFTER YOU'VE ENTERED PROGRAM YOU'LL HAVE TO REFER PREVIOUS ARTICLE FOR SOME OF ITS USES.

VZ 200/300 LIGHT PEN PAGES 10-11
THIS IS NOT A FULL BLOWN PROJECT AS ONLY BASIC CONSTRUCTION DETAILS ARE GIVEN. THE CIRCUIT IS OF THE LASER LIGHTPEN WHICH WAS IMPORTED INTO AUSTRALIA IN LIMITED QUANTITIES.

ETI 1611 PROGRAMMER PAGES 12-13
UPDATE BY H. NACINOVICH
THIS IS THE LAST IN HERMAN'S UPDATE ON THE EPROM PROGRAMMER AND AGAIN I WAS ABLE TO COMPRESS THE REMAINING PAGES TO TWO.

VZ NSW LOTTO SELECTOR PAGES 14-16
PART II BY JOE LEON
TAPE SAVE/LOAD AND POOLS CHANGES HAVE BEEN ADDED TOGETHER WITH SOME MINOR CHANGES TO HARD COPY ROUTINES AS WELL.

WAVZ 200/300 USERS GROUP PAGES 17-18
BY GRAEME BYWATER
I ASKED GRAEME FOR SOME INFO ON WAVZ GROUP SO I COULD INCLUDE IT IN BOB KITCH'S ARTICLE AND ENDED UP WITH A HISTORY OF THEIR GROUP, THEIR TRIALS AND TRIBULATIONS PLUS SOME FUNNY EPISODES.

VZ MODEM SOFTWARE AND FAST PAGE 18
M/C DISASSEMLER SOFTWARE

SOFTWARE FOR SALE - PATCH3.3 PAGE 19
EXT. DOS & MENU-FILE COPIER

USER GROUPS ** NEWS ** SUBS PAGE 20

DISCLAIMER: EVERY EFFORT IS MADE TO INSURE THE ACCURACY OF INFORMATION CONTAINED WITHIN BE IT GENERAL, TECHNICAL, PROGRAMMING, ETC. NO RESPONSIBILITY CAN BE ACCEPTED BY HUNTER VALLEY VZ USERS' GROUP OR AUTHOR AS A RESULT OF APPLYING SUCH INFORMATION IN PRACTICE.

COPYRIGHT: THE HUNTER VALLEY VZ JOURNAL IS SUBJECT TO COPYRIGHT AND NO MATERIAL IN THE JOURNAL MAY BE REPRODUCED IN PART OR WHOLE WITHOUT THE CONSENT OF THE HUNTER VALLEY USERS' GROUP OR THE AUTHOR WHO RETAINS COPYRIGHT.

HV VZ UG & JOURNAL FIFTH BIRTHDAY:

THE CLUBS PUBLICATION IS 5 YEARS OLD AND 4.5 YEARS AS EDITOR FOR ME. IT HAS BEEN A LONG TIME AND I COULD'NT HAVE DONE IT WITHOUT YOUR SUPPORT BOTH AS A SUBSCRIBER AND CONTRIBUTOR.

THANK YOU DAVE MITCHELL:

THE HV VZ UG OWES DAVE A GREAT DEBT. HE HAS MADE AVAILABLE HIS E&F DISK WP PATCHES AS A FUND RAISER FOR THE CLUB WHICH HAS HELPED THE CLUB FINANCIALLY TO SURVIVE. WE COULD'NT HAVE DONE IT WITHOUT YOU DAVE. THANK YOU.

FUTURE HV VZ UG CLUB MEETINGS:

THE JUNE 7 MEETING WILL BE THE LAST AT JESMOND NEIGHBOURHOOD CENTRE. FUTURE MEETINGS WILL BE HELD AT MEMBERS PLACES STARTING WITH JOE LEON ON JULY 5. SEE PAGE 20 FOR MORE DETAILS.

WANTED TO BUY - VZ DISK CONTROLLERS:

IF YOU HAVE ONE FOR SALE OR YOU KNOW OF A DICK SMITH STORE THAT HAS SOME UNITS LEFT PLEASE LET ME KNOW.

JOE LEON 22 DRURY STREET WALLSEND 2287 (049) 512 756

WANTED TO BUY - VZ 200 IN GOOD ORDER:

BEN IS STILL AFTER A VZ 200 IN GOOD WORKING ORDER AND WILL PAY A REASONABLE PRICE. IF YOU CAN HELP PLEASE CONTACT:

BEN HOBSON PO BOX 255 QUIRINDI NSW 2343

HINTS & TIPS - PAPER CLIPS:

RECENTLY I HAD SOME MAJOR PROBLEMS WITH PAPER CLIPS, THE METAL VARIETY. I HAD TO FIND SOME DOCUMENTS AND INSTRUCTIONS FOR SOME PROGRAMS, ETC. IN ALL CASES I HAD USED METAL PAPER CLIPS AND WOULD YOU BELIEVE THEY WERE ALL RUSTED MARKING THE PAPER AND TEXT.

THE SOLUTION IS SIMPLE, USE PLASTIC OR PLASTIC COATED METAL TYPES. THE LATTER IS MORE EXPENSIVE BUT WORTH IT IF YOU WANT TO PRESERVE YOUR DOCUMENTS IN PRIME CONDITION.

VZ 200/300 INTERNAL 32K RAM MODS:

BOTH ABOVE PROJECTS APPEARED IN PREVIOUS ISSUES AND WORK AS DESIGNED. I FAILED TO MENTION THAT USERS OF WORDPRO CARTRIDGE WORD PROCESSOR WOULD NOT BE ABLE TO USE THEM AS THERE WOULD BE TOO MUCH MEMORY FOR IT TO OPERATE, 12K IN FACT.

THE SOLUTION IS SIMPLE. SOME MEMORY HAS TO BE DISABLED AT D000F-FFFFH VIA A SPDT SWITCH. A14 TO 32K RAM HAS TO BE CUT AND THE END FROM 32K RAM PIN 2 GOES TO THE CENTRE OF THE SWITCH. ONE SIDE GOES TO OTHER CUT WIRE WHILE THE OTHER SIDE IS GROUNDED. GROUNDING A14 ON 32K RAM TURNS IT INTO A 16K RAM.

THERE IS ANOTHER SOLUTION AS WELL, A DISK VERSION OF THE CARTRIDGE. AS A BONUS AN EXTRA 2K OF MEMORY IS AVAILABLE FOR TEXT BUT IT WILL ONLY WORK IF YOU HAVE DONE THE INTERNAL 32K MEMORY MOD OR HAVE A 64K MEMORY EXPANSION OR DONE THE VZ 200 SUPER II MODS.

VZ 200/300 144K MEMORY EXPANSION:

AT LONG LAST I HAVE IT UP AND RUNNING AND IT WILL BE DEMONSTRATED AT NEXT CLUB MEETING. I USED 2 X 8K AND 1 X 128K RAM CHIPS. IT GIVES ME 8 X 16K BANKS AND THEY ALL RESIDE AT C000H-FFFFH (49152-65535). THAT IS A LOT OF MEMORY FOR THE HUMBLE VZ. THE QUESTION IS WHAT TO DO WITH ALL THAT EXTRA MEMORY. ANY IDEAS? 144K PROJECT IN NEXT ISSUE.

SINGLE DISK TRACK FORMATTER
WRITTEN BY DAVE MITCHELL

THIS PROGRAM HAS BEEN A LONG TIME COMMING, IT WAS PLAGUED WITH BUGS HOWEVER HERE IS A PROGRAM THAT WILL FORMATT SINGLE TRACKS.

THE PROGRAM ONCE RUN WILL BEEP TO LET YOU KNOW IT HAS BEEN LOADED FROM DISK. THE USR ROUTINE WILL BE SET UP SO YOU CAN RE-ENTER THE PROGRAM IF YOU BREAK OUT OF IT. EG: PRINT USR(0)

DISPLAYED ON THE SCREEN WILL BE :-

```
   SINGLE TRACK FORMATT
   BY D.MITCHELL
ENTER TRACK NUMBER :
```

THE TRACK NUMBER IS TO BE ENTERED IN HEX. A WORD OF WARNING:- IF A TRACK ALREADY HAS DATA, IT WILL BE LOST IF YOU FORMATT THIS TRACK.

WHEN A TRACK HAS BEEN FORMATTED THE PROGRAM RESTARTS WITH THE BEEP TO LET YOU KNOW IT IS COMPLETED. THIS PROGRAM IS USEFULL WHEN DATA IS LOST FROM TRACK ZERO.

FORMATT BASIC LISTING:

```
00010 FORI=-28672TO-27895:READA:POKEI,A:B=B+A:NEXT
00020 IFB<>80322THENPRINT"ERROR IN DATA":END
00030 IFPEEK(16384)<>170THENPRINT"NO DISK DRIVE":END
00040 BSAVE"FORMATT",9000,9308
00045 :
00100 DATA33,6,144,34,142,120,243,205,80,52,251,253,126,20,183
00110 DATA40,13,243,245,205,8,64,241,71,205,62,64,205,11,64,33
00120 DATA140,146,205,117,43,205,58,5,218,190,29,26,254,32,202
00130 DATA25,26,35,6,2,17,0,0,126,254,48,56,31,254,58,56,10,254
00140 DATA65,56,23,254,71,48,19,214,7,230,15,72,6,4,203,35,203
00145 :
00150 DATA18,16,250,179,95,65,215,16,220,120,254,2,210,30,144,123
00160 DATA254,40,48,161,243,245,50,110,146,253,119,18,33,123,146
00170 DATA134,50,112,146,126,50,111,146,253,119,17,205,8,64,241
00180 DATA183,40,4,71,205,59,64,219,19,203,127,40,28,205,11,64
00190 DATA251,33,212,146,205,117,43,205,73,0,243,205,80,52,205
00195 :
00200 DATA8,64,1,100,0,205,56,64,24,222,1,232,3,205,56,64,253,229
00210 DATA225,17,77,0,25,253,117,14,253,116,15,235,33,99,146,1
00220 DATA24,0,237,176,98,107,54,0,19,1,130,0,237,176,253,54,56
00230 DATA17,1,144,1,205,56,64,253,110,14,253,102,15,17,11,0,25
00240 DATA84,93,19,66,75,3,217,1,100,0,205,56,64,253,126,51,203
00245 :
00250 DATA183,253,119,51,211,16,1,100,0,205,56,64,221,33,123,146
00260 DATA253,110,14,253,102,15,253,86,51,6,154,205,43,145,253
00270 DATA114,51,217,221,126,1,221,35,18,134,2,26,217,254,255,194
00280 DATA3,145,205,11,64,251,195,6,144,78,62,32,170,203,17,210
00290 DATA63,145,211,16,238,32,87,43,211,16,195,74,145,211,16,238
00295 :
00300 DATA0,87,43,211,16,195,74,145,35,195,78,145,195,81,145,219
00310 DATA18,62,32,170,203,17,210,102,145,211,16,238,32,87,43,211
00320 DATA16,195,113,145,211,16,238,0,87,43,211,16,195,113,145
00330 DATA35,195,117,145,195,120,145,219,18,62,32,170,203,17,210
00340 DATA141,145,211,16,238,32,87,43,211,16,195,152,145,211,16
00345 :
00350 DATA238,0,87,43,211,16,195,152,145,35,195,156,145,195,159
00360 DATA145,219,18,62,32,170,203,17,210,180,145,211,16,238,32
00370 DATA87,43,211,16,195,191,145,211,16,238,0,87,43,211,16,195
```

```
00380 DATA191,145,35,195,195,145,195,198,145,219,18,62,32,170,203
00390 DATA17,210,219,145,211,16,238,32,87,43,211,16,195,230,145
00395 :
00400 DATA211,16,238,0,87,43,211,16,195,230,145,35,195,234,145
00410 DATA195,237,145,219,18,62,32,170,203,17,210,2,146,211,16
00420 DATA238,32,87,43,211,16,195,13,146,211,16,238,0,87,43,211
00430 DATA10,195,13,146,35,195,17,146,195,20,146,219,18,62,32,170
00440 DATA203,17,210,41,146,211,16,238,32,87,43,211,16,195,52,146
00445 :
00450 DATA211,16,238,0,87,43,211,16,195,52,146,35,195,56,146,195
00460 DATA59,146,219,18,62,32,170,203,17,210,80,146,211,16,238
00470 DATA32,87,43,211,16,195,91,146,211,16,238,0,87,43,211,16
00480 DATA195,91,146,35,35,0,5,194,43,145,201,128,128,128,128,128
00490 DATA128,0,254,231,24,195,0,0,0,128,128,128,128,128,0,195
00495 :
00500 DATA24,231,254,0,8,1,9,2,10,3,11,4,12,5,13,6,14,7,15,255
00510 DATA31,32,32,32,32,32,32,83,73,78,71,76,69,32,84,82,65,67
00520 DATA75,32,70,79,82,77,65,84,84,13,32,32,32,32,32,32,32,32
00530 DATA66,89,32,32,68,46,77,73,84,67,72,69,76,76,13,69,78,84
00540 DATA69,82,32,84,82,65,67,75,32,78,85,77,66,69,82,32,58,0
00545 :
00550 DATA13,32,32,32,82,69,77,79,86,69,32,87,82,73,84,69,32,80
00560 DATA82,79,84,69,67,84,32,76,65,66,69,76,13,32,32,32,32,32
00570 DATA32,32,80,82,69,83,83,32,82,69,84,85,82,78,13,0,0,0
```

WARNING: SAVE BEFORE RUN!

NOTE: FOR THOSE THAT DON'T KNOW NUMBERS 0 TO 39 IN HEX THEY'RE REPRODUCED BELOW TOGETHER WITH THEIR DECIMAL EQUIVALENTS.

TRACK-DEC	00	01	02	03	04	05	06	07	08	09	10	11	12	13	14	15	16	17	18	19
TRACK-HEX	00	01	02	03	04	05	06	07	08	09	0A	0B	0C	0D	0E	0F	10	11	12	13

TRACK-DEC	20	21	22	23	24	25	26	27	28	29	30	31	32	33	34	35	36	37	38	39
TRACK-HEX	14	15	16	17	18	19	1A	1B	1C	1D	1E	1F	20	21	22	23	24	25	26	27

EDITOR'S COMMENT:

FORMATT IS ONE OF A TRILOGY OF PROGRAMS WRITTEN BY DAVE MITCHELL WHICH WERE DESIGNED TO COMPLEMENT EACH OTHER. THE OTHER TWO ARE DISK FILER (REVIEW NEXT ISSUE) AND LABEL-II WHICH WILL APPEAR IN NEXT ISSUE. FORMATT WAS PRIMARELY DESIGNED TO WIPE TRACK 0 CLEAN WHICH IT DOES VERY WELL. I FOUND FROM TRACK 3 ON IT MISSED.

LIKE MOST DISK USERS ON MANY OCCASIONS I COULD'NT GET A DISK DIRECTORY SIMPLY BECAUSE TRACK 0 WAS CORRUPTED ALTHOUGH THE DATA WAS STILL INTACT. USING DAVE'S THREE PROGRAMS I CAN NOW RESURRECT MOST OF THESE DISKS WHICH IS FAIRLY SIMPLE. EG:

1) FORMATT IS USED TO RE-FORMATT TRACK 0.
2) LABEL-II IS USED TO RE-ENTER THE DISK DIRECTORY INFORMATION AND AS A BONUS LABEL-II AUTOMATICALLY UPDATES THE TRACK MAP FOR ME.
3) BEFORE YOU CAN USE LABEL-II YOU MUST KNOW EXACTLY WHAT WAS IN THE DIRECTORY AND DISK FILER CAN PROVIDE THAT INFORMATION ON ALL YOUR PROGRAMS. EG:

FILETYPE, FILENAME, TRACK & SECTOR NUMBER, START & END ADDRESS.

NOTE: I USED FORMATT TO WIPE TRACK 0 ON A DISK CONTAINING OVER 12 DIRECTORY FILES AND USING ABOVE PROCEDURE I WAS ABLE TO RESTORE ALL PROGRAMS QUITE EASILY. ALSO IF YOU ERASE A FILE YOU CAN USE LABEL-II TO RESTORE IT PROVIDED YOU DON'T OVER-WRITE IT BEFOREHAND.

A HISTORY OF VZ USER GROUPS IN AUSTRALIA AND NZ PART II

BY BOB KITCH

5. ACROSS THE TASMAN.

THE VZ WAS SOLD BY DSE STORES IN NEW ZEALAND AND IN JULY 1984 A USER GROUP COMMENCED IN CHRISTCHURCH. THEY PRODUCED A "CHRISTCHURCH VZ USER GROUP NEWSLETTER" ON A MONTHLY BASIS UP UNTIL APRIL 1988 WHEN INTEREST WANED. THEIR NEWSLETTERS ARE FULL OF BASIC PROGRAMS AND ARE VERY CHATTY WITH DETAILS OF THEIR REGULAR MONTHLY MEETINGS.

6. LYSCO FROM WA.

THE LEON YOUNG SOFTWARE COMPANY SPRANG UP IN PERTH IN LATE 1984. (ACTUAL DATES ARE UNCERTAIN AS LEON DID NOT DATE HIS NEWSLETTERS.) HE ALSO SUPPORTED THE AMSTRAD AND COMMODORE COMPUTERS. LEON'S NEWSLETTERS AND CATALOGS WERE FAIRLY INFORMAL NOTES BUT CONTAINED A NUMBER OF USEFUL TIPS ON THE VZ AS WELL AS ADVERTISEMENTS FOR HIS SOFTWARE. I HAVE ABOUT 10 NEWSLETTERS IN ALL DATED AROUND NOVEMBER 1984 TO HIS WIND-UP IN JULY 1986.

7. ANOTHER IN NZ.

IN DECEMBER 1984 ANOTHER USER GROUP WAS UNDERWAY IN AUCKLAND, NEW ZEALAND. THEY PRODUCED "XILOG THE MICROCOMPUTER MAGAZINE FOR VZ200, VZ300 AND AQUARIUS USERS" - SUGGESTING THEIR TIES WITH DSE. I HAVE AN INCOMPLETE SET OF XILOG BUT IT IS FULL OF INTERESTING SNIPPETS FOR THE VZ USER. MY LAST EDITION IS #8 DATED AUGUST 1985. DOES ANYONE KNOW ANY MORE ABOUT THIS CLUB?

8. OUT WEST IN NSW.

ALSO IN LATE 1984, MR. RICK SWANCOTT ORGANIZED A SMALL USER GROUP IN THE WESTERN SUBURBS OF SYDNEY. THEY PRODUCED 2 SMALL NEWSLETTERS AROUND DECEMBER 1984, ENTITLED "OUT WEST VZ-200 USER GROUP". IT WAS FILLED WITH BASIC GAMES.

9. FROM THE TROPICS..

I FIRST CORRESPONDED WITH MR. GORDON BROWELL IN DARWIN IN LATE 1985. GORDON WAS RUNNING THE "AD LIB VEEZEE MICRO CLUB". HE PRODUCED INFORMAL NOTES AND PROGRAMS AND FREELY CIRCULATED THESE TO ANY INTERESTED CORRESPONDENTS. THE INFORMALITY OF THIS ARRANGEMENT SUBSEQUENTLY RESULTED IN HIS PRODUCTION OF TWO EXCELLENT BEGINNERS SERIES. THE FIRST WAS "MICRO MAGIC - BEGINNERS GUIDE TO THE VEE ZED" IN 6 PARTS, AND THE SECOND WAS "STUDIO AD LIB - MICRO MAGIC WORKSHOP" ALSO IN 6 PARTS. THEY ARE EXCELLENTLY WRITTEN AND PRODUCED SERIES.

SOMEWHERE AROUND 1985, GORDON MOVED TO BIGGENDEN IN SOUTH-EAST QUEENSLAND BUT UNFORTUNATELY HE HAS MORE RECENTLY BECOME INVOLVED IN OTHER COMPUTERS.

10. ANOTHER BRISBANE GROUP.

MR. MICHAEL NOVAKOVIC, A SECONDARY STUDENT AT THE TIME, AND LIVING AT GOODNA, A WESTERN SUBURB OF BRISBANE, PRODUCED 4 NEWSLETTERS. IT WAS CALLED "VZCOMPU200/300" AND RAN FROM DECEMBER 1985 TO APRIL 1986. MICHAEL EXPERIMENTED WITH MACHINE CODE AND POKE'S TO THE COMMUNICATION REGION!

11. YET ANOTHER IN NSW.

IN JANUARY 1986, MR. MARK HARWOOD PUBLISHED THE FIRST EDITION OF "VZ USER". HE PRODUCED 22 ISSUES AND FINISHED IN SEPTEMBER 1988.

MARK WAS A TERTIARY STUDENT UNDERTAKING ELECTRICAL ENGINEERING STUDIES. HIS NEWSLETTER CONTAINED A NUMBER OF IN-DEPTH FEATURES ON THE VZ. HE ALSO GAVE AN INTRODUCTION TO VZDOS-IN-ROM THAT HAS NOT BEEN BETTERED ELSEWHERE. MARK ALSO DEVELOPED SOME EXCELLENT SOFTWARE IN CONJUNCTION WITH GAVIN WILLIAMSON OF LASERLINK.

12. ANOTHER NSW CLUB.

THE HUNTER VALLEY REGION OF NSW HAS BEEN WELL SERVED SINCE JUNE 1986 BY THE "HUNTER VALLEY VZ USERS GROUP NEWSLETTER" (NOW JOURNAL). MR GAVIN WILLIAMSON PRODUCED THE FIRST 6 NEWSLETTERS BUT MR. JOE LEON HAS PRODUCED UP TO THE CURRENT EDITION #35. THIS NEWSLETTER IS STILL UNDERWAY AND IS PRODUCED BI-MONTHLY. THE NEWSLETTERS ARE CONSISTENTLY PACKED WITH PROGRAMS AND HARDWARE MODIFICATIONS.

13. AND BACK TO VICTORIA.

SCOTT LE BRUN WAS A VERY PROLIFIC WRITER OF ADVENTURE GAMES FOR THE VZ. IN AUGUST 1986 HE BEGAN PUBLICATION OF "VEEZED DOWN UNDER". SCOTT ALSO RAN MONTHLY MEETINGS FROM HIS HOME. SCOTT PRODUCED 13 EDITIONS BEFORE THE ILLUSTRIOUS HARRY HUGGINS TOOK OVER IN SEPTEMBER 1988. HARRY HAS SINCE PRODUCED NUMBER 28 AND IS STILL GOING STRONG. HARRY HAS ALSO ACQUIRED THE REMAINING VZ HARDWARE FROM DSE. IF YOU ARE EVER PASSING THROUGH MELBOURNE, PLAN TO SPEND AN EVENING WITH HARRY.

14. ANOTHER AUCKLAND CLUB.

IN OCTOBER 1986 PETER HILL COMMENCED THE AUCKLAND VZ300/200 USERS CLUB. SINCE THAT TIME PETER HAS PRODUCED ON A MONTHLY BASIS A CREDITABLE 50 EDITIONS OF "VZ-LINK". THE AUCKLAND CLUB IS STILL GOING STRONG AND HAS A MONTHLY MEETING IN THE CITY - AFTERNOON TEA AND A CUPPA PROVIDED.

15. AN INFORMAL BRISBANE GROUP.

A GROUP OF ENTHUSIASTS IN BRISBANE DECIDED TO HOLD MONTHLY MEETINGS WITHOUT PRODUCING A NEWSLETTER AS, AT THE TIME, JOHN D'ALTON WAS CARRYING OUT THIS FUNCTION. THIS GROUP MEETS ON THE FIRST SATURDAY OF EACH MONTH AT STAN NOBLE'S HOUSE. THIS GROUP IS EVOLVING TOWARDS A COMPUTER INTEREST GROUP AS MOST OF THE MEMBERS HAVE NOW PURCHASED PC'S. THE VZ STILL GETS A HAMMERING AND SOME NEW-COMERS REGULARLY APPEAR.

16. A NEW INNOVATION.

LAST YEAR JASON OAKLEY OF SAPPHIRE PRODUCTIONS PRODUCED 2 EDITIONS OF HIS EXCELLENT "DISKMAG". THIS IS A MAGAZINE ON DISK FOR THE VZ. JASON NEEDS ALL THE SUPPORT HE CAN GET TO CONTINUE HIS EFFORTS.

17. AN OLD INNOVATION. BY JOE LEON

J&R SOFTWARE STARTED A VZ TAPE NEWSLETTER SOMETIME IN 1984 AND AT THE MOMENT I HAVE ONLY ONE COPY, VOL.1 NO.3 WHICH IS THE LAST ONE I RECEIVED AROUND JANUARY 1985. IT WASN'T A NEWSLETTER AS SUCH BUT MAINLY A VECHICLE TO ADVERTISE HIS WARES, BOTH SOFTWARE AND HARDWARE WHICH WAS QUITE COMPREHENSIVE FOR THE VZ 200.

18. ANOTHER WESTRALIAN GROUP.

SEE PAGES 17-18 FOR DETAILS. . .

```
00001 '*****************************************************************
00002 '***   TONE  GENERATOR  BY  R.B. KITCH        17/4/1987    ***
00003 '***                    REF:  VDU 3/16                     ***
00004 '*****************************************************************
00005 '
00010 CLS:PRINT@8,"TONE GENERATOR":PRINT@197,"LOADING MACHINE CODE"
00011 GOTO 110
00019 '
00020 '***CONVERT UNSIGNED TO SIGNED DECIMAL - PASSED IN UD & SD%.
00030 IF UD>32767 THEN SD%=INT(UD-65536) ELSE SD%=INT(UD)
00035 RETURN
00039 '
00040 '***CONVERT UNSIGNED DECIMAL TO MSB & LSB - IN UD,MS%,LS%.
00050 MS%=INT(UD/256):LS%=INT(UD-256*MS%):RETURN
00059 '
00060 '***CONVERT SIGNED TO UNSIGNED DECIMAL - PASSED IN SD% & UD.
00070 IF SD%<0 THEN UD=SD%+65536 ELSE UD=SD%
00080 RETURN
00099 '
00100 '***LOWER TOM TO SAVE ROUTINE.
00110 TM=256*PEEK(30898)+PEEK(30897)-100:'***RESERVE 99 BYTES.
00120 UD=TM:GOSUB 50:POKE 30898,MS%:POKE 30897,LS%
00130 CLEAR 100                          :'***RESETS ALL VARIABLES.
00140 UD=0:TM=0:AD=0:SD%=0:MS%=0:LS%=0   :'***INITIALIZE STORAGE.
00150 I%=0:DV%=0
00160 DIM VA%(2,23),PA%(4),MS$(4)        :'***INITIALIZE ARRAYS.
00170 TM=256*PEEK(30898)+PEEK(30897)     :'***TOM.
00199 '
00200 '***READ IN SOUND ROUTINE.
00210 FOR AD=TM+1 TO TM+60               :'***LOAD 60 BYTES.
00220 UD=AD:GOSUB 30:READ DV%:POKE SD%,DV%
00230 NEXT AD
00240 UD=TM+1:GOSUB 50                   :'***SET USR POINTERS.
00250 POKE 30863,MS%:POKE 30862,LS%
00299 '
00300 '***INITIALIZE POINTERS IN VA%().
00310 FOR I%=0 TO 23
00320 READ VA%(0,I%):UD=TM+VA%(0,I%):GOSUB 30:GOSUB 50
00330 VA%(0,I%)=SD%:VA%(1,I%)=LS%:VA%(2,I%)=MS%
00340 NEXT I%
00399 '
00400 '***POKE STORAGE LOCATIONS INTO ROUTINE.
00410 POKE VA%(0,10),VA%(1,4):          POKE VA%(0,11),VA%(2,4)
00420 POKE VA%(0,12),VA%(1,6):          POKE VA%(0,13),VA%(2,6)
00430 POKE VA%(0,14),VA%(1,8):          POKE VA%(0,15),VA%(2,8)
00440 POKE VA%(0,16),VA%(1,0):          POKE VA%(0,17),VA%(2,0)
00450 POKE VA%(0,18),VA%(1,0):          POKE VA%(0,19),VA%(2,0)
00460 POKE VA%(0,20),VA%(1,2):          POKE VA%(0,21),VA%(2,2)
00470 POKE VA%(0,22),VA%(1,2):          POKE VA%(0,23),VA%(2,2)
00499 '
00500 '***LOAD SCREEN MESSAGES.
00510 MS$(0)="RANGE OF+/-32767"+CHR$(10)+CHR$(13)+"   ON INTERVAL"
00520 MS$(1)="  OFF INTERVAL"
00530 MS$(2)="  ON INCREMENT"
00540 MS$(3)=" OFF INCREMENT"
00550 MS$(4)="   TONE LENGTH"
00599 '
00600 '***FIND OUT PARAMETERS.
00610 CLS:PRINT@8,"TONE GENERATOR":PRINT
00620 FOR I%=0 TO 4
00630 PRINT MS$(I%);:INPUT PA%(I%):SD%=PA%(I%)
```

```
00640 GOSUB 70:GOSUB 50                    POKE VA%(0,2*I%+1),MS%
00650 POKE VA%(0,2*I%),LS%:
00660 NEXT I%
00670 'GOTO 20000     :'***DEBUG JUMP.
00699 '
00700 '***RUN TONE ROUTINE.
00710 AD=USR(0)
00799 '
00800 '***GO AGAIN?
00810 PRINT:INPUT"ANOTHER TONE (Y/N)";A$:IF A$="Y" THEN GOTO 610
00899 '
00900 '***RESET TOM ON EXIT.                    :'***ORIGINAL TOM.
00910 TM=TM+100
00920 UD=TM:GOSUB 50:POKE30898,MS%:POKE30897,LS%
00930 CLEAR 50
00999 '
01000 '***SOUND ROUTINE - VALUES OF 0 ARE RESET LATER.
01001 '***ALSO SETS CASSETTE PORT ON BITS 1&2.
01002 '***REGISTERS USED AF, BC, DE, HL & HL'.
01003 '***LENGTH 60 BYTES. NO STACK USED.
01010 DATA 237,75,0,0   :'     LD BC,(ONINC)
01020 DATA 237,91,0,0   :'     LD DE,(OFINC)
01030 DATA 217          :'     EXX
01040 DATA 42,0,0       :'     LD HL'(TONDUR)
01050 DATA 217          :'T1   EXX
01060 DATA 62,36        :'     LD A,00100100B
01070 DATA 42,0,0       :'     LD HL,(ONDUR)
01080 DATA 9            :'     ADD HL,BC
01090 DATA 34,0,0       :'     LD (ONDUR),HL
01100 DATA 50,00,104    :'     LD (6800),A
01110 DATA 43           :'T2   DEC HL
01120 DATA 125          :'     LD A,L
01130 DATA 180          :'     OR H
01140 DATA 32,251       :'     JR NZ, T2
01150 DATA 62,3         :'     LD A,00000011B
01160 DATA 42,0,0       :'     LD HL,(OFDUR)
01170 DATA 25           :'     ADD HL,DE
01180 DATA 34,0,0       :'     LD (OFDUR),HL
01190 DATA 50,00,104    :'     LD (6800),A
01200 DATA 43           :'T3   DEC HL
01210 DATA 125          :'     LD A,L
01220 DATA 180          :'     OR H
01230 DATA 32,251       :'     JR NZ, T3
01240 DATA 217          :'     EXX
01250 DATA 43           :'     DEC HL'
01260 DATA 125          :'     LD A,L'
01270 DATA 180          :'     OR H'
01280 DATA 32,215       :'     JR NZ, T1
01290 DATA 217          :'     EXX
01300 DATA 62,00        :'     LD A,00000000B
01310 DATA 50,00,104    :'     LD(6800),A
01320 DATA 201          :'     RET
01699 '
01700 '***OFFSETS FOR PARAMETER STORAGE ABOVE ROUTINE.
01710 DATA 81,82    :'ON INTERVAL   - PA%(0)
01720 DATA 83,84    :'OFF INTERVAL  - PA%(1)
01730 DATA 85,86    :'ON INCREMENT  - PA%(2)
01740 DATA 87,88    :'OFF INCREMENT - PA%(3)
01750 DATA 89,90    :'TONE DURATION - PA%(4)
01759 '
```

```
01760 '***OFFSETS FOR PARAMETERS IN MACHINE CODE ROUTINE.
01770 DATA 3,4      :'ONINC
01780 DATA 7,8      :'OFINC
01790 DATA 11,12    :'TONDUR
01800 DATA 17,18    :'ONDUR
01810 DATA 21,22    :'ONDUR
01820 DATA 34,35    :'OFDUR
01830 DATA 38,39    :'OFDUR
01840 STOP
10000 '***UPDATE DISK FILE.
10010 CLS:PRINT@200,"ERASING FILE":ERA"TONEGEN"
10020 PRINT@200,"SAVING FILE ":SAVE"TONEGEN"
10030 STOP
20000 '***PRINTER DUMP FOR DEBUGGING.
20001 '***TO ACTIVATE TAKE OUT REMARK IN LINE #670.
20010 LPRINT"DEBUG OUTPUT FROM TONEGEN":LPRINT
20020 LPRINT"TOM =",TM:LPRINT
20030 LPRINT"USR() ADDR. =",PEEK(30862),PEEK(30863):LPRINT
20040 LPRINT"PARAMETERS"
20050 FOR I%=0 TO 4
20060 LPRINT MS$(I%),I%,PA%(I%)
20070 NEXT I%:LPRINT
20080 LPRINT"POINTERS IN VA%()"
20090 FOR I%=0 TO 23
20100 LPRINTI%,VA%(0,I%),VA%(1,I%),VA%(2,I%)
20110 NEXT I%
20120 END
```

VZ 200/300 (LASER) LIGHT PEN

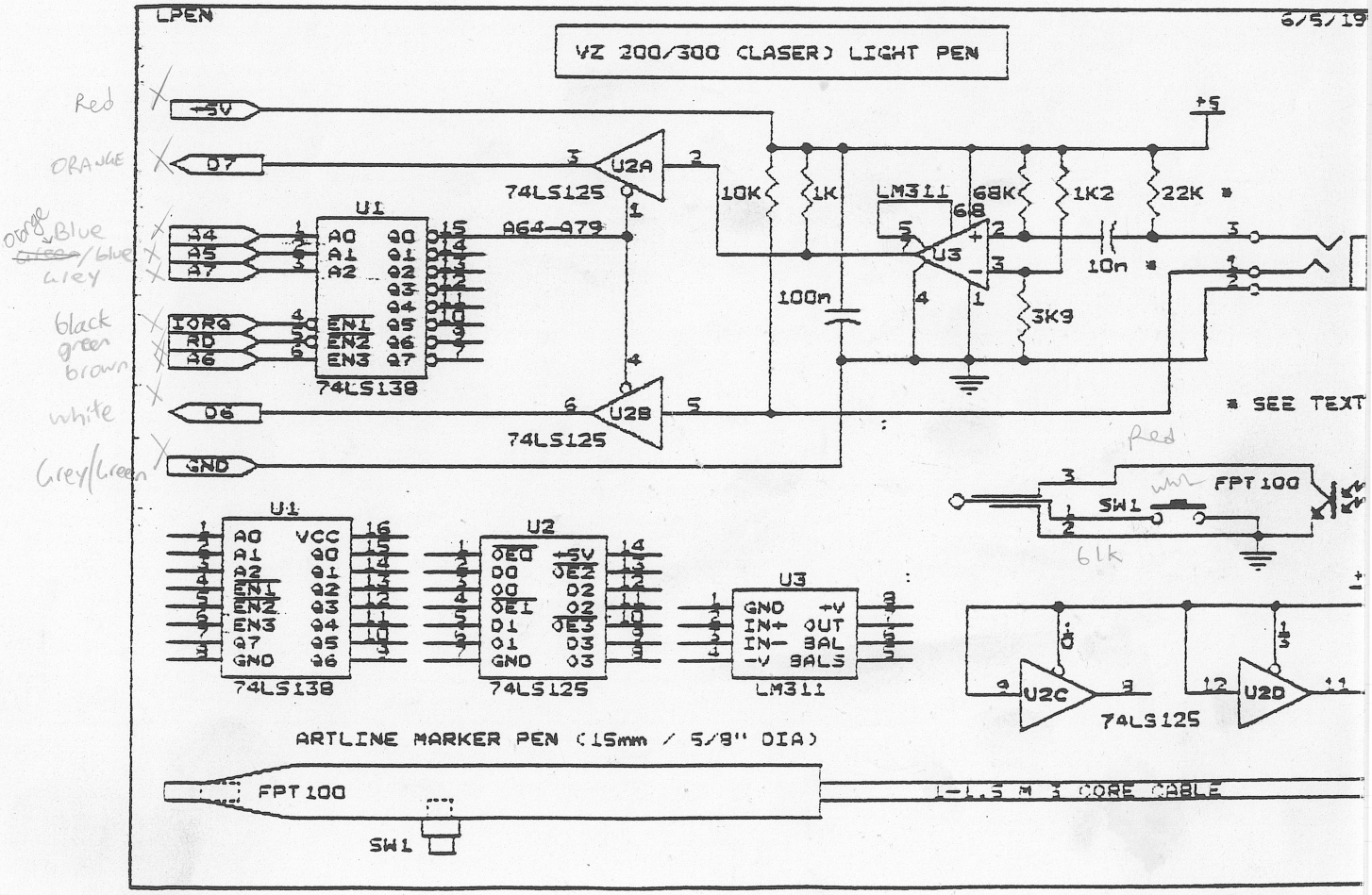

VZ 200/300 LIGHT PEN CONT.

A LIGHT PEN IS AN INPUT DEVICE BETWEEN A COMPUTER AND ITS MONITOR SCREEN AND NEEDS A PROGRAM OR ROUTINE TO CONTROL IT, JUST LIKE A JOYSTICK. ON THE VZ IT'S NOT VERY ACCURATE AND MONITOR SCREEN CONTRAST AND BRIGHTNESS PLAY A BIG PART IN ITS OPERATION.

ONLY A LIMITED NUMBER OF VZ (LASER) LIGHT PENS WERE EVER IMPORTED INTO AUSTRALIA AND I HAD ONE FOR YEARS ALONG WITH ABOUT FIVE PROGRAMS WHICH WERE AVAILABLE FOR IT. RECENTLY I CAME INTO POSESSION OF THE CIRCUIT DIAGRAM WHICH IS REPRODUCED ON PREVIOUS PAGE. IT'S MAIN PURPOSE IS TO SUPPLEMENT THE TECHNICAL REFERENCE MANUAL.

THIS ALLOWS OTHER VZ USERS TO MAKE THEIR OWN AS IT ONLY USES A FEW COMPONENTS AND THE CIRCUIT IS FAIRLY STRAIGHT FORWARD. THE 74LS138 DECODES I/O PORT A64 TO A79 AND IS A READ ONLY PORT. DATA BITS 6 AND 7 ARE USED FOR SCREEN LOCATION INPUT WHICH IS GENERATED BY LM311 A VOLTAGE COMPARATOR.

I SEE NO REASON WHY THE UNIT SHOULD INTERFERE WITH NORMAL VZ OPERATIONS AS THE DATA BITS 6 AND 7 ARE CONTROLLED BY TRISTATE BUFFERS. YOU MAY HAVE TO TRANSPOSE THE RESISTOR AND CAPACITOR MARKED BY ASTERICKS TO GET THE UNIT TO WORK.

CONSTRUCTION OF MAIN UNIT:

THE UNIT SHOULD FIT QUITE EASILY INTO THE PRINTER INTERFACE OR EVEN THE VZ ITSELF. TIME DID NOT PERMIT ME TO PREPARE A VEROBOARD LAYOUT AND I LEAVE THAT TO YOU. THE PIN OUTS FOR ALL IC'S ARE SHOWN TO MAKE CONSTRUCTION EASIER. IF THE DEMAND WAS THERE I COULD DESIGN IT AND PRESENT IT IN A FUTURE ISSUE, BUT AT THE MOMENT I'LL BE FAIRLY BUSY FOR A WHILE. USE A 3.5MM STEREO SOCKET AS AN INPUT SOCKET FOR THE LIGHT PEN.

LIGHT PEN CONSTRUCTION:

AN ARTLINE TYPE MARKER PEN OF ABOUT 15MM DIAMETER IS IDEAL FOR IT AND ONE WITH A BLACK NOSE CONE WOULD BE BEST AS IT'S OPAQUE. REMOVE THE INSIDES OF THE PEN AND NOSE CONE FIRST AND WIPE CLEAN BEFORE USE. THE FPT100 PHOTO TRANSISTOR HAS TO GO INSIDE THE NOSE CONE AS SHOWN IN THE DIAGRAM BUT NOT TOO CLOSE TO THE FRONT AS INCIDENTAL LIGHT COULD AFFECT ITS OPERATION.

ON A SAMPLE PEN CASING I USED A SUBMINI PUSH BUTTON SWITCH MOUNTED NEAR THE FRONT IN A POSITION WHERE IT WAS EASY FOR THE FINGER TO OPERATE. THE CABLE GOES OUT THE END OF THE PEN OR YOU COULD MOUNT A 3.5MM STEREO SOCKET THERE AND USE A STEREO CABLE WITH A 3.5MM STEREO PLUG AT EACH END. THIS MAKES STORING THE UNIT MUCH EASIER.

LIGHT PEN PROGRAMS & PROGRAMMING:

I CAN'T ADVISE YOU ON PROGRAMMING AS I'VE NEVER DONE IT MYSELF. I USED COMMERCIAL PROGRAMS WHICH ARE:

1) LIGHT PEN DEMONSTRATION PROGRAMS WHICH CAME WITH LASER LIGHTPEN.
2) DRAWING BOARD (HI-RES DRAWING PROGRAM).
3) MAGIC PAINT (HI-RES DRAWING PROGRAM).
4) JIGSAW (HI-RES JIGSAW OF A WINDMILL WHICH YOU HAVE TO RE-ASSEMBLE.
5) MYSTERY BOX (40 LO-RES BOXES SIMILAR TO MATCH BOX GAME).

TO BE QUITE HONEST I HARDLY EVER USE THE LIGHT PEN AND I DONT KNOW OF ANYONE THAT DOES USE IT FOR SERIOUS APPLICATIONS. AS FAR AS THE VZ IS CONCERNED I FEEL IT'S MORE OF A GADGET THAN A USEFUL TOOL.

ETI 1611 VZ300 EPROM PROGRAMMER 35/12
UPDATE PART III BY H.NACINOVICH

THE PROGRAM CONSISTS OF TWO PARTS, ONE PART OF WHICH IS WRITTEN IN BASIC, THE OTHER IN MACHINE CODE. THE MACHINE CODE PART (OR SUBROUTINE) DOES THE ACTUAL COMPARISON. THE BASIC PART STORES THE EPROM SIZE AT MEMORY LOCATIONS B502H AND B503H AND THEN CALLS THE MACHINE CODE SUBROUTINE. THE LATTER COMPARES THE TWO EPROMS AND STORES AN ADDRESS VALUE IN LOCATIONS B500H AND B501H BEFORE RETURNING TO THE MAIN PROGRAM. IF THE STORED ADDRESS VALUE CORRESPONDS TO THE EPROM SIZE, THEN THE TWO EPROMS COMPARE OK. IF NOT, THEN THE STORED VALUE CORRESPONDS TO THE NUMBER OF BYTES CHECKED BEFORE THE MACHINE CODE SUBROUTINE HAS FOUND A DATA MISMATCH BETWEEN THE TWO EPROMS.

BELOW IS A LISTING OF THE MACHINE AND SOURCE CODE ROUTINE WHICH DOES THE ACTUAL COMPARISON OF THE TWO EPROMS.

```
B400      F3          DI                  ;DISABLE INTERRUPT
B401      3E A6       LD    A,A6          ;CONTROL BYTE FOR 2764, 27128
B403      D3 CA       OUT   (0CAH),A      ;TO PORT 8
B405      B7          OR    A             ;CLEAR CARRY
B406      2A 02 B5    LD    HL,(0B502H)   ;EPROM SIZE TO HL REGISTER
B409      11 00 80    LD    DE,8000H      ;NO OF BYTES, 27256
B40C      ED 52       SBC   HL,DE         ;IS EPROM TYPE 27256?
B40E      21 00 00    LD    HL,0          ;EPROM START ADDRESS TO HL
B411      20 04       JR    NZ,P1         ;GOTO P1 IF EPROM TYPE NOT 27256
B413      3E A2       LD    A,0A2H        ;SET A14 = 0 (FOR 27256 EPROMS)
B415      D3 CA       OUT   (0CAH),A      ;CONTROL BYTE TO PORT 8
B417 P1   DD 21 00 C0 LD    IX,0C000H     ;START ADDRESS OF EPROM + OFFSET
B418 P2   DB 46 00    LD    B,(IX + 0)    ;READ EPROM 2
B41E      DB C8       IN    A,(0C8H)      ;READ PORT 8 (EPROM 1)
B420      B8          CP    B             ;COMPARE DATA
B421      20 1C       JR    NZ,END        ;JUMP TO END IF DATA MISMATCH
B423      DD 23       INC   IX            ;EPROM OFFSET ADDRESS + 1
B425      23          INC   HL            ;EPROM OFFSET + 1
B426      ED 5B 02 B5 LD    DE,(0B502H)   ;EPROM SIZE TO DE REGISTER
B42A      B7          OR    A             ;CLEAR CARRY
B42B      ED 52       SBC   HL,DE         ;CURRENT ADDRESS = EPROM SIZE?
B42D      19          ADD   HL,DE         ;RESTORE PREVIOUS VALUE OF HL
B42E      28 0F       JR    Z,END         ;GOTO END IF FINISHED
B430      B7          OR    A             ;CLEAR CARRY
B431      11 00 40    LD    DE,4000H      ;LOAD 4000H INTO DE REGISTER
B434      ED 52       SBC   HL,DE         ;IS CURRENT ADDRESS = 4000H?
B436      19          ADD   HL,DE         ;RESTORE PREVIOUS VALUE OF HL
B437      20 E2       JR    NZ,P2         ;GOTO P2 IF ADDRESS NOT 4000H
B439      3E A6       LD    A,0A6H        ;SET A14 = 1 (FOR 27256)
B43B      D3 CA       OUT   (0CAH),A      ;CONTROL BYTE TO PORT 8
B43D      18 D8       JR    P1            ;GOTO P1
B43F END  22 00 B5    LD    (0B500),HL    ;STORE CURRENT EPROM ADDRESS
B442      3E 02       LD    A,2H          ;CONTROL CODE TO DISABLE EPROM
B444      D3 CA       OUT   (0CAH),A      ;CONTROL BYTE TO PORT 8
B446      C9          RET                 ;RETURN TO MAIN PROGRAM
```

* TOP OF MEMORY HAS TO BE SET BELOW B400H
* EPROM SIZE (2 BYTES) TO BE LOADED INTO B502H (LOW BYTE) AND B503H (HIGH BYTE) BEFORE RUNNING SUBROUTINE
* WHEN SUBROUTINE IS FINISHED RUNNING, CURRENT VALUE IN HL REGISTER WILL BE RETURNED IN MEMORY ADDRESS B500H (LOW BYTE) AND B501H (HIGH BYTE)
* IF A DATA MISMATCH HAS BEEN DETECTED, THIS VALUE WILL BE THE ADDRESS LOCATION IN EPROM AT WHICH THE FIRST DATA ERROR HAS BEEN DETECTED
* IF THE TWO EPROMS MATCH OK, THE VALUE RETURNED WILL BE EQUAL THE EPROM SIZE
* NO RESPONSIBILITY TAKEN FOR ANY ERRORS.

BASIC PROGRAM FOR COMPARING EPROMS

```
1 POKE30897,0:POKE30898,179:CLEAR 50
10 CLS
20 REM INITIALISE PORTS
30 OUT 201,7: OUT 201,143: OUT 203,7: OUT 203,15:OUT202,0
35 GOSUB500
40 REM LED SHOULD NOW GO OUT
50 PRINT"WARNING: DO NOT INSERT EPROM    WHILE LED IS ON"
55 REM  "IF LED IS ON, THERE IS AN       INITIALISATION ERROR"
56 PRINT: PRINT
60 PRINT"1  EPROM TYPE 2764"
70 PRINT"2  EPROM TYPE 27128"
80 PRINT"3  EPROM TYPE 27256"
90 PRINT:PRINT:PRINT"ENTER SELECTION ...";
100 K$= INKEY$: IF K$="" GOTO 100
110 IFK$="1"THEN BYTE=8192:TYPE$="2764":GOTO 200
120 IFK$="2"THEN BYTE = 16384:TYPE$="27128":GOTO 200
130 IF K$="3" THEN BYTE=32768:TYPE$="27256":GOTO 200
140 GOTO 100
200 CLS: POKE30862,0: POKE30863,180:SOUND30,2
210 PRINT"DO NOT INSERT OR REMOVE EPROM   WHILE LED IS ON"
220 PRINT:PRINT"EPROM TYPE IS ";TYPE$:OUT202,2
240 INPUT"IS THIS CORRECT (Y/N) ";K$:PRINT
250 IF K$<>"Y" THEN GOTO 10
255 PRINT"INSERT EPROMS AND"
256 INPUT"PRESS <RETURN> WHEN READY";K$
258 OUT202,166:FORJ=1TO100:NEXT
260 HI=INT(BYTE/256):LO=BYTE-256*HI
262 POKE-19198,LO:POKE-19197,HI
265 X=USR(BYTE)
270 REM LINE 260 STORES VALUE OF BYTE AT ADDRESS B502/3H
280 REM AND CALLS MACHINE SUBROUTINE FOR COMPARING EPROMS
300 A=PEEK(-19200)+PEEK(-19199)*256
310 IF A<> BYTE GOTO 400
320 PRINT
330 PRINT"EPROMS COMPARE OK. ":PRINT:PRINT"DO AGAIN (Y/N)?"
335 SOUND20,5:SOUND15,6
340 K$ = INKEY$: IFK$="" GOTO 340
350 IF K$="Y" GOTO 200
360 IF K$="N" THEN END
380 GOTO340
400 PRINT
410 PRINT"EPROMS DO NOT MATCH":PRINT
415 SOUND10,5
420 PRINT"NUMBER OF BYTES COMPARED OK"   BEFORE MISMATCH = ";A
430 PRINT:PRINT"DO AGAIN (Y/N)?"
440 GOTO340
500 N=-19456
510 READ X
520 IFX<0THEN RESTORE: RETURN
530 POKE N,X
540 N=N+1:GOTO510
550 DATA 243,62,166,211,202,183,42,02,181,17,0,128,237,32,33,0,0
560 DATA32,4,62,162,211,202,221,33,0,192,221,70,0,219,200,184
565 DATA 32,28
570 DATA 221,35,35,237,91,02,181,183,237,32,25,40,15,183,17,0,64
580 DATA 237,82,25,32,226,62,166,211,202,24,216,34,00,181,62,2
590 DATA 211,202,201,-1
```

VZ NSW LOTTO AND POOLS SELECTOR 35/14
PART II BY JOE LEON

```
10  GOTO1000:REM......VZ NSW LOTTO SELECTOR (EXPANDED MARK SIX)

80 CLS:PRINT"YR    ";:REM.............;SCREEN TITLE DISPLAY
82 IF PL=0 PRINT@10,"";:ELSE PRINT@10,"";
83 PRINT"  WK"
84 IF YR=0 THEN RETURN ELSE PRINT@ 3,USING F1$;YR
85 IF WK=0 THEN RETURN ELSE PRINT@29,USING F2$;WK;

130 PRINT@225,"ENTER SYSTEM NO ...6-18 ";
138 :
140 IF SN>6 THEN 170
142 IF PL=1 THEN 160
148 :
150 PRINT@289,NG$;"4,6,8,10,12 ";:REM....LOTTO NG INPUT ROUTINE
152 INPUT NG:IF NG=0 THEN 900
154 IF NG=4 OR NG=6 OR NG=8 OR NG=10 OR NG=12 THEN 200 ELSE 150
158 :
160 PRINT@289,NG$;" 2,4,6,8,10 ";:REM....POOLS NG INPUT ROUTINE
162 INPUT NG:IF NG=0 THEN 900
164 IF NG=2 OR NG=4 OR NG=6 OR NG=8 OR NG=10 THEN 200 ELSE 160
168 :
170 PRINT@289,NG$;"........1-10 ";:REM......P/L NG INPUT ROUTINE
172 INPUT NG:IF NG=0 THEN 900
174 IF NG<1 OR NG>10 THEN 170
178 :

215 A(G,I)=RND(RN):IF I=1 THEN 230

315 PRINT"#";USING F1$;G;:PRINT":";

330 PRINT USING F2$;A(G,J);

403 LPRINT TAB(10)"VZ ";
405 IF PL=0 LPRINT"LOTTO";:ELSE LPRINT"POOLS";
407 LPRINT" SELECTOR  YR ";:LPRINT USING F1$;YR;

415 FOR G=1 TO NG:LPRINT TAB(10)"#";USING F1$;G;:LPRINT":";
420 FOR J=1 TO SN:LPRINT TAB(10)"";
425 IF J=10 THEN LPRINT:LPRINT TAB(14)"";
430 LPRINT USING F2$;A(G,J);
435 NEXT J:LPRINT:NEXT G
440 LPRINT:LPRINT:GOTO 900

505 IF I$<>" "THEN 900 ELSE GOSUB 80
510 GOSUB 80:PRINT@385,"  DATA GN SN  GN EL DATA";
515 PRINT@429,USING F2$;NG;SN;
525 PRINT#"DATA",YR,WK,NG,SN,PL

535 PRINT@436,USING F2$;I;
540 PRINT USING F3$;J;A(I,J);
545 PRINT#"DATA",A(I,J):NEXT J,I

605 GOSUB 80:POKE 30796,1:REM".......;DISABLE  AND 
610 PRINT@385,"  DATA GN SN  GN EL DATA";
615 INPUT#"DATA",YR,WK,NG,SN,PL
620 GOSUB 82:SOUND 25,1
625 PRINT@429,USING F2$;NG;SN;
```

```
635 INPUT#"DATA",A(I,J)
640 PRINT@436,USING F2$;I;
645 PRINT USING F3$;J;A(I,J);
650 NEXT J,I

904 PRINT@106,"G)O LOTTO":PRINT@138,"P)POOLS"
906 PRINT@170,"Y)YR/WK":PRINT@234,"R)EPEAT"
908 PRINT@266,"D)ISPLAY":PRINT@298,"H)ARD COPY"
912 PRINT@362,"L)OAD":PRINT@394,"S)AVE"
944 SOUND 25,1

958 IF A$="G" PRINT@106,"▒":RN=44:PL=0:GOSUB 100:GOTO 130
962 IF A$="P" PRINT@138,"▒":RN=38:PL=1:GOSUB 100:GOTO 130
966 IF A$="Y" PRINT@170,"▒":GOSUB 100:GOTO 900
970 IF A$="R"AND CK=1 PRINT@234,"▒":GOTO 200
974 IF A$="D"AND CK=1 PRINT@266,"▒":GOTO 300
978 IF A$="H"AND CK=1 PRINT@298,"▒":GOTO 400
982 IF A$="L" PRINT@362,"▒":GOTO 600
986 IF A$="S"AND CK=1 PRINT@394,"▒":GOTO 500

1000 CLEAR 400:DIM A(12,18):REM.........:DECLARE VARIABLES, ETC
1005 F1$="##":F2$="###":F3$=" ## ":PL=0
1010 POKE 30862,80:POKE 30863,52:POKE 30744,0
1015 SP$="PRESS ▒▒▒▒▒ TO CONTINUE":NG$="NO OF GAMES "
1040 GOTO 900
1045 :
```

TAPE LOAD/SAVE MODIFICATIONS:

MAKE SURE YOU HAVE BACKUP OF PROGRAM ON TAPE FIRST BEFORE DOING ANY CHANGES. SOME OLD LINES MUST BE DELETED BEFORE YOU CAN ENTER NEW LINES. LOAD PROGRAM INTO MEMORY AND ENTER THE FOLLOWING LINE NUMBERS PRESSING RETURN AFTER EACH NUMBER.

520 800 805 810 815 820 916

THE TAPE LOAD/SAVE CHANGES ARE IN LINES 505-650 AND CONSIST MAINLY OF CHANGING PR# TO PRINT# AND IN# TO INPUT# AND DELETING OPEN AND CLOSE STATEMENTS. START BY ENTERING LINE 10 AND CONTINUE TILL ALL LINES HAVE BEEN ENTERED. SAVE THE PROGRAM EVERY NOW AND THEN SO YOU DON'T LOSE YOUR CHANGES IN CASE OF VZ HANG UPS OR CRASHES.

NORMALLY WHEN DATA IS LOADED FROM TAPE USING INPUT#, THE WAITING AND FOUND MESSAGES APPEAR ON THE SCREEN WHICH MAKES A MESS OF THE DISPLAY. THE POKE 30796,1 IN LINE 605 DISABLES BOTH MESSAGES. SO YOU KNOW THAT DATA IS BEING LOADED CORRECTLY LINES 610, 620, 625, 640 AND 645 DISPLAY THE INFORMATION AS IT'S BEING LOADED FROM TAPE, EG:.

```
LOADING/SAVING DATA GN SN  GN EL DATA
                    4  6   2  5  34
```

GN = NUMBER OF GAMES SELECTED
SN = SYSTEM NUMBER SELECTED
GN = NUMBER OF GAME BEING LOADED
EL = NUMBER OF SYSTEM ELEMENT BEING LOADED
DATA = LOTTO OR POOLS NUMBERS BEING LOADED

WHEN LOADING THE TITLE AT TOP OF SCREEN IS ALSO UPDATED WITH LOTTO OR POOLS PLUS YR/WK AS WELL. THE SAME INFORMATION IS ALSO PRESENTED ON SCREEN WHEN SAVING DATA TO TAPE.

BESIDES THE TAPE SAVE/LOAD ROUTINES, OTHERS HAVE BEEN MODIFIED AS WELL LIKE PRINTER DUMP, MAIN MENU, POOLS GAME ADDED.

POOLS MODIFICATIONS:

THESE MODS ARE MORE INVOLVED THAN PREVIOUS ONES AND WITH THE INFORMATION PRESENTED HERE YOU SHOULD BE ABLE TO MODIFY IT TO A DIFFERENT GAME/SYSTEM NUMBER COMBINATION.

LINE 215, THE 44 IN RND(44) HAS BEEN CHANGED TO A VARIABLE RND(RN) TO CATER FOR BOTH LOTTO AND POOLS.

LINES 958 AND 962 SET RN FOR LOTTO OR POOLS TOGETHER WITH A FLAG INDICATING WHICH ONE WAS SELECTED.

LINE 140 CHECKS FOR SYSTEM GREATER THAN 6 AND STEERS IT TO ITS APPROPRIATE INPUT ROUTINE.

LINE 142 CHECKS FOR POOLS SYSTEM 6 AND SENDS IT TO ITS INPUT ROUTINE.

LINES 150 TO 154 IS THE LOTTO NUMBER OF GAMES INPUT ROUTINE. LINE 154 CHECKS FOR SYSTEM 6 GAMES RULES.

LINES 160 TO 164 IS THE POOLS NUMBER OF GAMES INPUT ROUTINE. LINE 164 CHECKS FOR SYSTEM 6 GAMES RULES.

LINES 170 TO 174 IS THE LOTTO/POOLS SYSTEM NUMBER > 7 NUMBER OF GAMES INPUT ROUTINE. LINE 174 CHECKS FOR SYSTEM 7 OR GREATER GAMES RULES.

IN SHORT THE THREE ABOVE ROUTINES MAKE SURE YOU DON'T PLAY AN INVALID SYSTEM/GAME COMBINATION.

HARD COPY (PRINTER) ROUTINE:

LINES 415 TO 440 CONTAIN THE CHANGES TO THE ROUTINE. THE MAIN DIFFERENCE IS THAT THE PRINT OUT MATCHES THE SCREEN DISPLAY AND LOOKS MUCH TIDIER THAN BEFORE. THE SAMPLE GAMES BELOW SHOW THE NEW LOOK.

```
VZ LOTTO SELECTOR YR 91 WK 120

#1: 11 21 25 27 32 43
#2:  6 10 11 28 34 43
#3: 21 30 32 33 40 43
#4:  6 33 35 36 38 40
```

```
VZ POOLS SELECTOR YR 91 WK 120

#1:  1  8 12 14 17 18 19 20 21
    22 23 24 27 30 34 35 37 38
#2:  5  6  8 10 11 12 13 15 20
    24 25 28 29 33 34 35 36 38
```

AS YOU CAN SEE WHETHER YOU'RE PLAYING LOTTO SYSTEM # 6 OR POOLS SYSTEM # 18 THE PRINTOUT (HARD COPY) IS NICE AND NEAT WITH THE NUMBERS NICELY FORMATTED THANKS TO THE USE OF PRINT USING FUNCTION.

PLANNED FUTURE ENHANCEMENTS:

MAJOR DISK ROUTINES WITH ALL DISK FUNCTIONS.
WINNING NUMBERS CHECKING ROUTINE, WILL LET YOU KNOW IF YOU WIN.
MANUAL ENTRY OF GAMES CHOSEN ANOTHER WAY LIKE BIRTHDAYS, ETC.
FRQUENCY OF WINNING NUMBERS SO YOU CAN PLAN YOUR BIG WIN.

NOTE: NO RESPONSIBILITY TAKEN FOR ANY ERRORS.

NEXT ISSUE: MAJOR DISK CHANGES . . .

WAVZ 200/300 (COMPUTER) USERS' GROUP BY GRAEME BYWATER

OUR GROUP STARTED OF WITH A NOTICE IN THE WESTERN AUSTRALIAN NEWSPAPER IN FEBRUARY 1984; SAYING IF THERE IS ANYBODY INTERESTED IN MAKING A VZ 200 USERS' CLUB CONTACT ----. SO I RANG THIS NUMBER, AND ANDRE SCHOEN ANSWERED THE PHONE. AFTER WHICH I WAS GIVEN THE ADDRESS AND A MEETING NIGHT.

WHEN I ARRIVED AT ANDRE'S HOUSE, I FOUND 4 OR 5 PEOPLE AND IT WAS DECIDED TO HAVE FORTNIGHTLY MEETINGS THERE AND WE ALL HAD A GENERAL DISCUSSION ABOUT THE VZ. SOME WEEKS LATER, WITH A MEMBERSHIP OF ABOUT TWELVE, ANDRE SUGGESTED IT'S ABOUT TIME THAT WE HAD A CLUB NAME AND ELECTION OF OFFICERS. AFTER SOME DISCUSSION OF DIFFERENT NAMES OF THE CLUB, WE ALL SETTLED ON WAVZ STANDING FOR WEST AUSTRALIAN VZ 200 USERS' CLUB AND WHEN THE VZ 300 CAME TO WA, THE /300 WAS ADDED.

AS ANDRE STARTED THE CLUB, IT WAS DEEMED THAT HE BECAME PRESIDENT AND TREASURER AND DAVID ADAMS SECRETARY, RUSS HARVEY LIBRARIAN AND THE FEES TO BE $5.00. AT ONE STAGE, IT WAS TALKED ABOUT MOVING OUT OF A SMALL ROOM IN THE HOUSE AN GOING TO THE LEEDERVILLE TECHNICAL COLLEGE TO TRY AND GAIN MORE MEMBERSHIP. WE SET UP SHOP IN A BOARD ROOM WITH OUR COMPUTERS. FROM TIME TO TIME WE HAD INTERESTED PARTIES COME AND GO, BUT THE COLLEGE'S TERM HOLIDAYS DID NOT HELP OUR CAUSE WHEN THE DOORS WERE CLOSED. WE WERE THERE FOR A YEAR.

IT WAS UNWORKABLE TO BE AT THE COLLEGE AS WE STILL HAD A SMALL MEMBERSHIP. RUSS HARVEY OFFERED HIS PLACE AS A MEETING PLACE, WE WERE THERE FOR ABOUT THREE YEARS. OUR MEMBERSHIP DID FALL DOWN TO A LOW NUMBER OF ABOUT FIVE WITH THE LOSS OF ANDRE WHO MOVED INTERSTATE.

AT ONE STAGE DICK SMITH HAD A JOHN HALLEM WORKING FOR THEM. ONE OF HIS JOBS WAS TO PROMOTE TH VZ, AND TRY GAIN MORE MEMBERSHIP. BUT THROUGH TIME IT FELL THROUGH NOT FOR WANT OF TRYING.

TO KEEP CLUB VIABLE, I TOOK OVER NOT AS PRESIDENT BUT AS A SENIOR MEMBER, WHERE I DID HAVE AT MY HOUSE. IN TRYING TO GAIN MORE MEMBERSHIP (IN THE MEAN TIME WE GAINED TWO MORE MEMBERS) WE FOR A YEAR HAD OUR MEETING AT A POLICE BOYS CLUB SMALL ROOM WHERE WE PAID A DOLLAR A HEAD AND SOME TIMES ONLY TWO OF US SHOWED UP. SINCE THEN, IT HAS BEEN MOSTLY AT MY PLACE AND FROM TIME TO TIME AT OTHER MEMBERS PLACES. I DECIDED BECAUSE THE LACK OF MEMBERSHIP TO CALL OURSELVES AN ENTHUSIASTS GROUP. AS WE DID NOT HAVE A BIG MEMBERSHIP, IT WAS NOT WORTH A NEWSLETTER EVEN THOUGH REX GLADDING PUT SAMPLE ONE ON A SHEET OF PAPER ONCE.

IN 1986 I RECEIVED A PHONE CALL FROM A MR RON CHELL, WOULD THE CLUB BE INTERESTED IN DOING A POINT SCORING SYSTEM FOR THE AUSTRALIAN SPEEDCAR DRIVERS CHAMPIONSHIPS? AFTER CONSULTATION WITH OTHER MEMBERS I SAID YES. SO IN JANUARY 1987 WITH TWO SETS OF COMPUTERS, CASSETTES, DISK DRIVES, PRINTERS AND TV SETS AND A PROGRAM WHICH WAS ORIGINALLY MADE BY ANDRE SCHOEN AND ADAPTED BY PETER DODD IN SOUTH AUSTRALIA FOR THE SPEEDCARS.

WE WERE SET UP ON THE INFIELD WHERE THE PLACE-GETTING STEWARDS GAVE US THE RESULTS FOR OUR COMPUTERS AND AFTER EACH HEAT WE DO A SORT OF POINTS OF DRIVER'S CAR NUMBERS AND THEN PRINT OUT FOR THE STEWARDS AND THE COMMENTATOR. THE SECOND NIGHT OF THE SPEEDWAY, IT STARTED TO RAIN. IT WAS A MAD SCRAMBLE TO COVER OUR STILL TURNED ON GEAR WITH TARPAULINS AND US SITTING UNDER THE TABLES ON THE GRASS HANGING ON TO THE ENDS OF THE TARPS AND HOPING THAT THERE WONT BE AN UNWANTED BIG FIREWORKS DISPLAY FROM OUR DIRECTION. THE REST OF THE MEETING WAS POSTPONED TO MONDAY NIGHT.

IN OCTOBER 1990, I RECEIVED A SPEEDWAY CALENDAR OF EVENTS, WITH THE AUST. SPEEDCAR CHAMP'S ON AGAIN, SO I ENQUIRED AND EVENTUALLY WE DID USING TWO COMPUTERS AND GEAR AGAIN FOR THE FEBRUARY MEETING. AS FAR AS I KNOW, THAT ANY COMPUTER HAS BEEN USED AT A SPEEDWAY IN AUSTRALIA FOR POINT SCORING SYSTEM. WHEN LATER ON THIS YEAR I WILL BE FINDING OUT WHERE THE NEXT AUST. SPEEDCAR CHAMP'S BEING HELD I WOULD LIKE FOR SOME ONE IN THAT STATE TO DO IT WITH THE PROGRAM PROVIDED BY WAVZ AND SUBSEQUENT YEARS.

IN THE LAST FEW YEARS, WAVZ HAS HAD THE RISE AND FALL OF MEMBERSHIP AND AT THE MOMENT, WE STAND AT SIX ON THE BOOK AS A BUNCH OF DEDICATED ENTHUSIASTS WHICH MEETS ONCE A MONTH.

*** VZ DISASSEMBLER ***

WHAT, ANOTHER DISASSEMBLER? BUT, YOU HAVE ALREADY GOT ONE? THIS ONE IS DIFFERENT!

THIS PROGRAM IS ENTIRELY WRITTEN IN MACHINE CODE. IT ACTUALLY RUNS ABOUT 40 TIMES FASTER THAN D.S.E.'S DISASSEMBLER (OR ANY ONE ELSE'S). IT WILL DISASSEMBLE ANY PROGRAM THAT YOU CAN BLOAD INTO MEMORY. IT WORKS WITH ANY VZ CONFIGURATION. IT DISASSEMBLES EVEN THE 88 EXTRA Z80 OPCODES THAT ZILOG DOESN'T ADMIT TO.

PRICE? ONLY $25.00: TAPE AND DISK VERIONS AVAILABLE.

PRICE INCLUDES HARDCOPY MANUAL. INTERESTED? YOU MAY PURCHASE THIS PROGRAM FROM PETER HICKMAN, FOR ADDRESS SEE BELOW.

** VZ MODEM SOFTWARE **

DID YOU WANT TO TALK TO OTHER COMPUTERS VIA A MODEM? DID YOU BUY THE DSE TERMINAL EPROM, ONLY TO DISCOVER THAT IT ONLY WORKS WITH TAPE. IT ONLY ALLOWS YOU TO PRINT FILES, NOT SAVE THEM OR SEND THEM!

YOUR PROBLEMS ARE SOLVED! THE HICKMAN BROTHERS, PETER AND ANDREW, HAVE A BRAND NEW PROJECT WHICH WILL ALLOW YOU TO SEND, RECEIVE & SAVE FILES VIA A MODEM. IT WORKS WITH DISK!

SALE PRICE: $25.00 ONLY

INCLUDED ARE INSTRUCTIONS FOR THE HARDWARE MODIFICATIONS.

A SMALL MODIFICATION IS NEEDED TO YOUR DISK CONTROLLER. YOUR USER GROUP MAY HELP YOU MODIFY YOUR COMPUTER TO USE THIS EXCITING NEW SOFTWARE! IF YOU HAVE THE FUNCTION KEYS MOD AS WELL, THEN YOU WILL BE ABLE TO SEND EXTRA ASCII CHARACTERS SUCH AS:-

{ | } ~ _

THE MANUAL IS SUPPLIED ON DISK FOR YOU TO PRINT OUT WITH YOUR DISK VERSION OF E & F WORDPROCESSOR. IF YOU DO NOT OWN AN E & F WORDPROCESSOR PROGRAM, PLEASE ENCLOSE ANOTHER $5.00 (TOTAL $30.00) FOR PHOTOCOPYING AND POSTAGE OF THE MANUAL.

FOR PURCHASE OR INFORMATION CONTACT:

PETER HICKMAN PO. BOX 8 WERRINGTON NSW 2747

NOTE: AS OF THIS ISSUE COPYRIGHT ON PATCH 3.3 REVERTS BACK TO DAVE MITCHELL. ON BEHALF OF HUNTER VALLEY VZ USERS GROUP OUR SINCERE THANKS GO TO DAVE FOR MAKING IT AVAILABLE TO US AND HELPING THE CLUB SURVIVE THIS LONG THROUGH HIS GENEROUS EFFORTS. YOU'RE ONE OF A KIND DAVE, THANK YOU.

PATCH 3.3 WRITTEN BY DAVE MITCHELL WILL CONVERT YOUR E & F TAPE WORD PROCESSOR FOR FULL DISK USE WHILE RETAINING ALL ORIGINAL FUNCTIONS. BELOW ARE ADDED DISK COMMANDS & FUNCTIONS :-

LOAD, SAVE, ERASE, RENAME, DIRECTORY, INITIALIZE, UPDATE, DRIVE 1 & 2, SOFTWARE SHIFTLOCK & IMBEDDED PRINTER CONTROL CODES PLUS CTRL+P WHICH BYPASSES PRINT MENU AND PRINTS TO SCREEN OR PRINTER. A ROUTINE IS ALSO PROVIDED TO CONVERT YOUR BASIC PROGRAM OR SOURCE CODE FILES INTO WORD PROCESSOR FILES.

PATCH 3.3 HAS PROVISION FOR FAST SAVING AND LOADING OF TEXT DATA TO AND FROM DISK USING BLOCK SAVE/LOAD TECHNIQUES. PRINTER CONTROL CODES CAN BE SAVED TO TAPE OR DISK ALONG WITH YOUR TEXT.

BSTWP.F - THIS UTILITY PROVIDED WITH PATCH 3.3 WILL CONVERT BASIC PROGRAMS AND ED/ASS. SOURCE CODE FILES INTO WORD PROCESSOR FILES.

SYSTEM REQUIREMENTS - VZ 300 + 16K RAM PACK - VZ 200 + 26K

PRICE - AUS/NZ AU$20.00 - UPDATE - AUS-$10.00 - NZ-AU$11.00.
UPDATING AVAILABLE ONLY TO PREVIOUS PURCHASERS OF PATCHES.

EXTENDED DOS V1.3 - $15.00

UPDATED VERSION WITH EXTRA COMMANDS ADDED :-

OLD COMMANDS - MERGE, DIRA, DIRA, DIRB, LDIRB, OLD, OLD., DEC, HEX, STATUSA AND LSTATUSA. STATUSA AND LSTATUSA ALSO WORKS WITH VERSION 1.0 DOS.

NEW COMMANDS :-

MENU - LOADS AND RUNS BINARY OR TEXT MENU PROGRAM FROM DISK.
CODE - SIMPLIFIES USING PRINTER CONTROL CODES DIRECTLY OR FROM WITHIN A PROGRAM.
LTAB - IS FOR SETTING OF LEFT MARGIN.
MOVE - MOVES BASIC FILE FROM DISK TO CHOSEN MEMORY ADDRESS.
UPD - ERASES OLD FILE AND SAVES WITH SAME FILE NAME.

MENU/FILE COPIER - $15.00

THIS UTILITY WILL READ YOUR DISK DIRECTORY AND PRESENT YOU WITH SEVERAL OPTIONS. USING THE CURSOR YOU CAN RUN/BRUN ANY PROGRAM OR SELECT FILE COPY, REN, ERASE, DRIVE 1 OR 2, ETC. BESIDES COPYING TEXT AND BINARY FILES ALL OTHER FILES CAN BE COPIED AS WELL EXEPT FOR DATA FILES.

NOTE: DAVE MITCHELL OWNS COPYRIGHT ON THESE PROGRAMS.

FOR PURCHASE OR INFORMATION CONTACT DAVE MITCHELL - (079) 27 8519

24 ELPHINSTONE STREET NORTH ROCKHAMPTON QUEENSLAND 4701 AUST.

FOR INFORMATION OR DEMONSTRATION IN NEWCASTLE AREA CONTACT :-
JOE LEON - (049) 51 2756 - 22 DRURY STREET WALLSEND NSW 2287

** CONTRIBUTIONS TO THE JOURNAL **

IF YOU ARE THINKING OF CONTRIBUTING TO THE JOURNAL THE PREFERED FORMAT IS BASIC LISTINGS, WORD PROCESSOR OR SOURCE CODE FILES ON TAPE OR DISK. FILES FROM THE FOLLOWING WORD PROCESSORS CAN BE ACCEPTED :-

E & F TAPE OR DISK PATCH 3.1-3.3, WORDPRO CARTRIDGE, WORDPRO PATCH, MOST SOURCE CODE FILES AND ALL QUICKWRITE WORD PROCESSOR FILES.

** CLUB MEETINGS - ALL WELCOME **
FIRST FRIDAY OF MONTH

VENUE - JESMOND NEIGHBOURHOOD CENTRE MORDUE PARADE JESMOND 2299
(REAR STOCKLAND MALL - BIG W)

JUNE 7 - LAST MEETING AT JESMOND NEIGHBOURHOOD CENTRE
144K RAM EXPANSION DEMONSTRATION . . .
BASIC - MACHINE CODE & ASSEMBLY CONTINUED . . . .

** FUTURE MEETINGS - NEW VENUE **

DUE TO FALLING LOCAL MEMBERSHIP THE GROUP HAS DECIDED THAT AFTER JUNE 7 IT WILL NO LONGER MEET AT JNC AS THE HALL HIRE IS GETTING TO EXPENSIVE FOR REMAINING MEMBERS. FROM JULY ON WE WILL MEET AT JOE LEON'S PLACE OR OTHER MEMBERS PLACES AS DECIDED BY MEMBERS.

JOE LEON 22 DRURY STREET WALLSEND 2287 (049) 512 756

MEETINGS WILL BE ONCE A MONTH AS BEFORE WITH THE DATES AS SET OUT BELOW. BECAUSE OF SOME MEMBERS HAVING TO WORK SHIFTWORK MEETING DATES WILL BE ADJUSTED TO ACCOMODATE THEM. SO PLEASE CHECK WITH JOE LEON FIRST BEFORE COMING OUT.

JULY 5 - AUG 2 - SEPT 6 - OCT 4 - NOV 1 - DEC 3

** CLUB COMMITTEE & SUBSCRIPTIONS **

PRESIDENT - ROSS WOODS - SECRETARY/EDITOR - JOE LEON
COMMITTEE MEMBERS - GARY BULLEY - COLIN BRIDGE - PETER JONES

SUBSCRIPTION TO - AUST. - 3 ISSUES $11.00 - 6 ISSUES $21.00
H.V.VZ.JOURNAL - N. Z. - 3 ISSUES $13.00 - 6 ISSUES $26.00

FOR MORE INFORMATION CONTACT JOE LEON (049) 512 756
HUNTER VALLEY VZ USERS GROUP - PO BOX 161 JESMOND 2299 AUSTRALIA
NOTE: PRICES INCLUDE POST & PACKING

** VZ USER GROUPS & PUBLICATIONS **

VZ DOWN UNDER - VZ MAGAZINE - 6 ISSUES - $18.00 PER ANUM
HARRY HUGGINS 12 THOMAS SREET MITCHAM VICTORIA 3132

WAVZ - WESTERN AUSTRALIA VZ USER GROUP
GRAEME BYWATER P O BOX 388 MORLEY W A 6062

BRISBANE VZ USERS WORKSHOP - C/O 63 TINGALPA ST. WYNUM WEST 4178
SOFTWARE FOR SALE - DISK MENU

SAPPHIRE PRODUCTIONS - VZ DISK MAGAZINE - $20.00 PER ANUM
CONTACT JASON OAKLEY PO BOX 600 TAREE NSW 2430

NOTE: WHEN WRITING TO ANY ABOVE OR H.V.VZ. USERS' GROUP FOR INFORMATION PLEASE ENCLOSE A S.S.A.E. OR NZ 2 INT. REPLY COUPONS.